Pro-Glide 5 Cantilever Gate - Balustrade

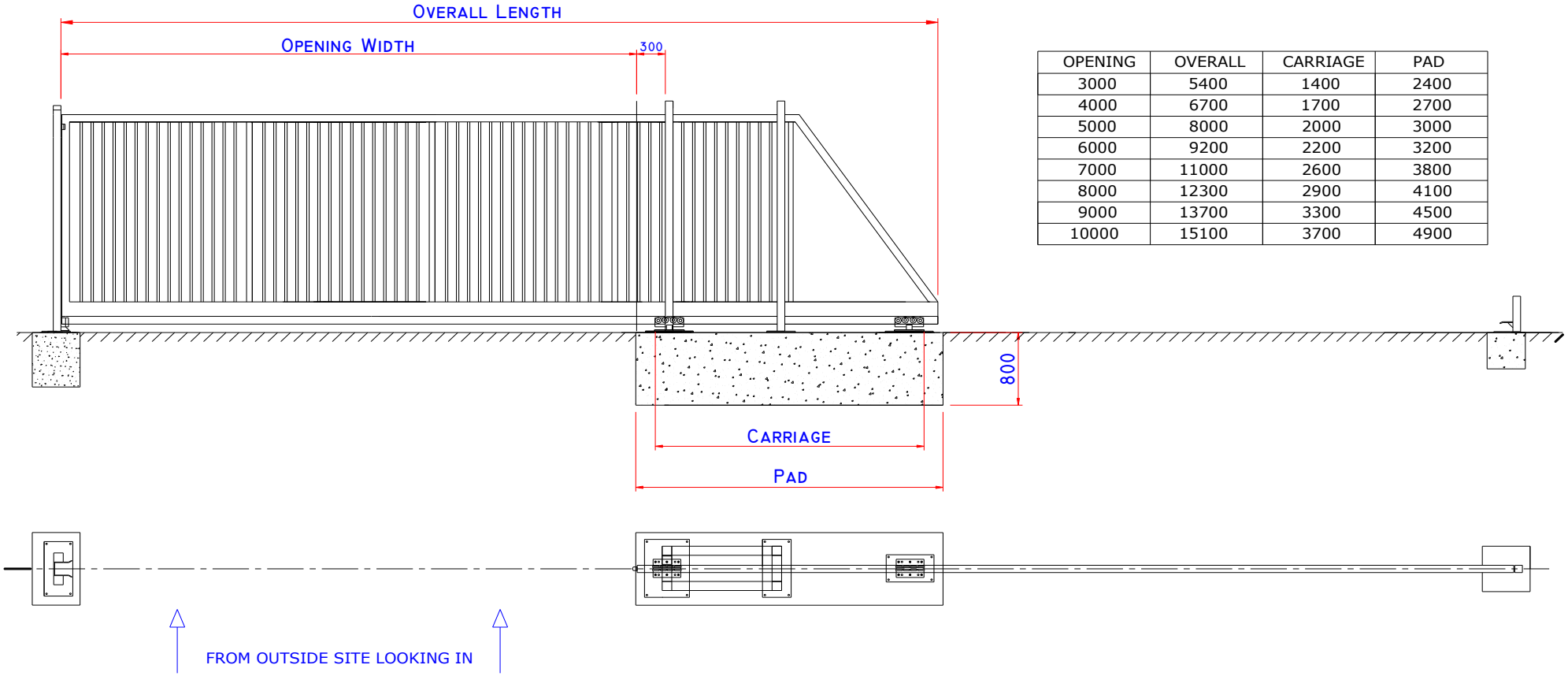

OPENING	OVERALL	CARRIAGE	PAD
3000	5400	1400	2400
4000	6700	1700	2700
5000	8000	2000	3000
6000	9200	2200	3200
7000	11000	2600	3800
8000	12300	2900	4100
9000	13700	3300	4500
10000	15100	3700	4900

Procter Gates, Railings, Metalwork,
Unit A3, Astra Park
Parkside Lane
Leeds LS11 5SZ
Tel. 0113 2705 121
E: info@proctermetalwork.co.uk
W: www.proctermetalwork.co.uk

PG05-CBAL